September 2012

Residential Buildings Energy Code Summary

Overview

Montana homebuyers appreciate the comfort and warmth of well-designed, energy-efficient houses. With the recent upgrade of Montana's statewide energy code, home buyers now have peace of mind knowing that Montana houses meet the latest standards for energy efficiency. All new houses in Montana must meet the minimum requirements of the 2009 International Energy Conservation Code (2009 IECC) with Montana amendments. This publication is a summary overview of the 2009 IECC.

The new statewide energy code became effective on March 26, 2010. Certified jurisdictions may take up to 90 days from their notification date to adopt the code.

Significant changes with the new Montana energy code explained in more detail in this brochure:

- Basement walls require insulation (finishing not required).
- At least one-half of the permanent light fixtures must have high efficiency bulbs such as CFLS.
- Heating system ductwork located outside of the conditioned (heated) part of a house must be tested for tightness.
- Air barrier material(s) such as spray in-place foam, sealed in-place sheathing, sealed in-place foam board or sealed poly are required in rim band joists, behind tub/shower enclosures on exterior walls and dropped ceilings adjacent to the thermal envelope.
- Programmable/setback thermostats are required in homes with furnaces.

The statewide energy code also gives house buyers an additional tool to use in making their purchase decision–the "Energy Efficiency Components Label." This label is required in all new houses and is a way for the builder to certify that the house at least meets the minimum code levels for insulation, window, and heating system efficiencies and other energy features required in a new house. A sample is shown in Figure 6. The label also ensures that the information about these features is not lost over time. The label should be permanently affixed to the house's electrical breaker box, so subsequent owners will have the same information available to them.

Cities, towns, and counties with building code jurisdictions are required to enforce the state energy code in their jurisdictions. A listing of certified jurisdictions that have adopted building codes is available at

continued on page 2

This booklet is an energy code summary with a listing of Montana amendments. A copy of the 2009 IECC can be ordered from the International Code Council at **www.iccsafe.org** or call 800-786-4452.

Montana Department of Environmental Quality

For more information contact:
Paul Tschida • Phone (406) 841-5232 • E-mail: ptschida@mt.gov
http://www.deq.mt.gov/energy/default.mcpx

Overview – *continued*

www.buildingcodes.mt.gov. Outside of these building code jurisdictions, builders are required to meet the requirements of the energy code and show energy code compliance through a self-certification process. This means that the builder is required to provide a written statement to the homeowner that the house meets the state energy code requirements. The home builder or agent provides this certification by signing and dating the energy-efficient components label.

Not only do home builders and home buyers benefit from this code, but Montana wins too. Energy-efficient homes consume less energy than homes not built to these standards. This means less energy has to be produced to heat and cool these homes which helps conserve our fossil fuel resources and protects Montana's environment.

What Buildings Are Covered Under The Statewide Energy Code?

The energy code applies to all residential buildings, additions, repairs and renovations in Montana (with exceptions noted below) regardless of fuel type (gas, electricity or other). Unaltered portions of existing buildings do not need to comply with this code. One- and two-family dwelling efficiency levels may vary slightly from multi- family dwellings. Residential buildings (R-2 and R-4) with more than three floors above ground must comply with the commercial energy code portions of the 2009 IECC code, excluding lighting provisions.

The following buildings are exempt from this code:

- Buildings that are neither heated nor cooled or that have a peak design rate of energy use less than 3.4 Btu/h per square foot for space conditioning.
- Buildings that are classified or determined to be eligible for listing in the National Register of Historic Places.

Ways to Show Energy Code Compliance

There are two primary ways to demonstrate that one- and two-family dwellings meet the requirements of the Montana Energy Code - 2009 International Energy Conservation Code (IECC with Montana amendments).

1. Follow the **prescriptive path** listed in Table 1.

2. Use REScheck™ a computer analysis, a free download at **www.energycodes.gov,** to show compliance, or other approved method.

   REScheck requires inputs of the areas and efficiency levels for ceilings, walls, and windows.

TABLE 1. Insulation and Window Requirements by Component

Component	Insulation or Efficiency Level
Ceiling	R-49/38 [A]
Exterior Wall	R-21 or R13+R5 CI [B]
Mass Wall	R19/15 [C]
Floor	R-30 [D]
Basement Wall	R-19/15 CI [E]
Slab Perimeter	R-10, [F] from top edge for 4 ft. R-15 for in-floor heated slab.
Crawlspace Wall	R-19/10 [G]
Window/Door U Factor	U - .33 [H]

Footnotes to Table 1 (contain some Montana Amendments)

The R-value requirement listings are for insulation material only, not for structural components such as drywall or siding. All materials, systems, and equipment must be installed in accordance with the manufacturers installation instructions.

A) Where R-49 is required, R-38 is acceptable if the full height of uncompressed R-38 insulation extends over the wall top plate at the eaves. See Figure 4.

Where there is not enough space to achieve Table 1 ceiling insulation levels, R-30 is allowed in up to 250 sq. ft. or 10 percent of the space, whichever is less.

Insulation markers with at least one-inch sized numbers are required at least every 300 sq. ft. of attic space and must face the access opening.

Attic access hatches and doors must be weather-stripped or sealed and baffled to prevent loose insulation from spilling into the living space and insulated to its surrounding area's requirement.

B) The second number is a listing for continuous Insulation (CI), which is insulation that runs continuously over structural members and is free of thermal bridging. Foam sheathing over exterior wall framing is an example of continuous insulation.

Steel framed wall requirements, where code requires wood framed walls to be insulated to R-21:
Either 16 or 24-inch on center framing; R-13 cavity with R-10 continuous insulation foam sheathing or R-19 with R-9 continuous insulation foam sheathing, or R-25 with R-8 continuous insulation foam sheathing.

Structural Insulated Panels (SIP) with at least 5.5 inches of foam, and insulated concrete foam systems (ICF) with at least 2 inches of foam on each side, surpass the R-21 wall requirements because of their lack of thermal bridging.

Log walls use mass wall requirements. Usually 14-inch and larger log walls will meet the R-15 requirement or REScheck can be used to show compliance.

C) Mass walls are considered to be above grade walls of concrete, concrete block, insulated concrete form (ICF), brick, (other than brick veneer), earth and solid timber/logs. R-19 applies when more than half the insulation is on the interior of the mass wall. REScheck can be used to show compliance.

D) Floor insulation must be in contact with the underside of the floor sheathing.

E) Basement walls, whether or not the space is finished, require R-19 cavity or R-15 continuous insulation level. A REScheck analysis will usually allow lower levels of insulation with less than a 12 percent window-to-wall ratio. R-10 continuous insulation should meet the basement insulation requirement. A REScheck analysis must be completed.

F) R-15 is required for heated slab-on-grade floors. Heated slab includes floors with heating elements, hydronic tubing and ductwork within and under the slab. Slab-on-grade floors with a floor surface less than 12 inches below grade require R-10 insulation, adding R-5 for heated slabs. Slab-on-grade insulation should extend downward from the top of the slab on the outside or inside of the foundation wall. The insulation should extend 4 feet by any combination of vertical and horizontal placement that extends out from the slab or under the slab (see the Insulated Slab Options, Figure 1). Insulation extending away from the building should be protected by pavement or at least 10 inches of soil. The top edge of the insulation installed between the exterior wall and the edge of the interior slab may be cut at a 45 degree angle. Exposed insulation shall have a weather-resistant protective covering extending at least 6 inches below grade level.

G) Conditioned crawlspace walls require a minimum of R-19 with fiberglass or R-10 with foam. Insulation should cover the entire foundation wall.

H) Because the U-value is the inverse of the R-value, a lower U-value indicates a window that has better thermal capabilities than a window with a higher U-value. Example: a U-.30 rated window is more efficient than a U-.33 rated window. Up to 15 sq. ft. of glazing is exempt for the U-value requirement. Skylights must have a U-value of at least .6.

Insulated Slab Options

Slab perimeter insulation of at least R-10
(R-15 for in-floor heat) from top edge for at least 4 feet.

FIGURE 1

Option 1

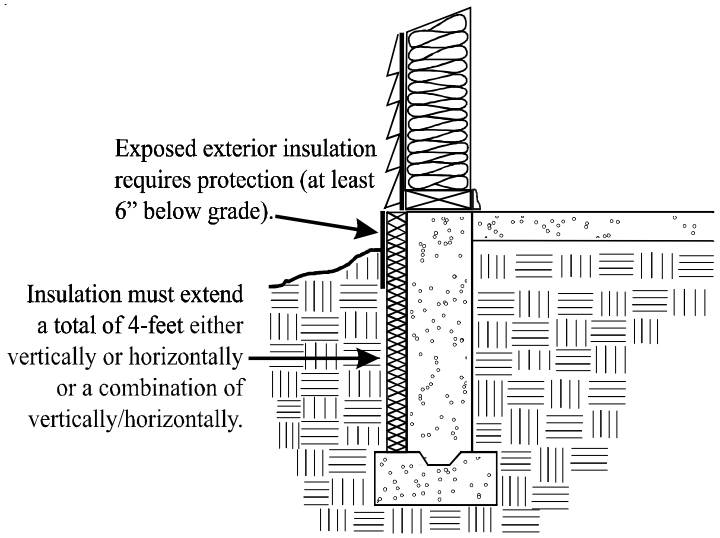

Option 2

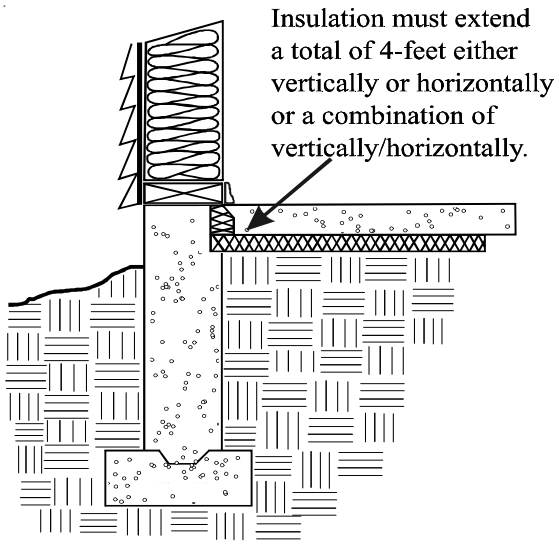

Option 3

2006 IRC Section 403.3 allows frost protected shallow foundation footing depth of 2 feet.

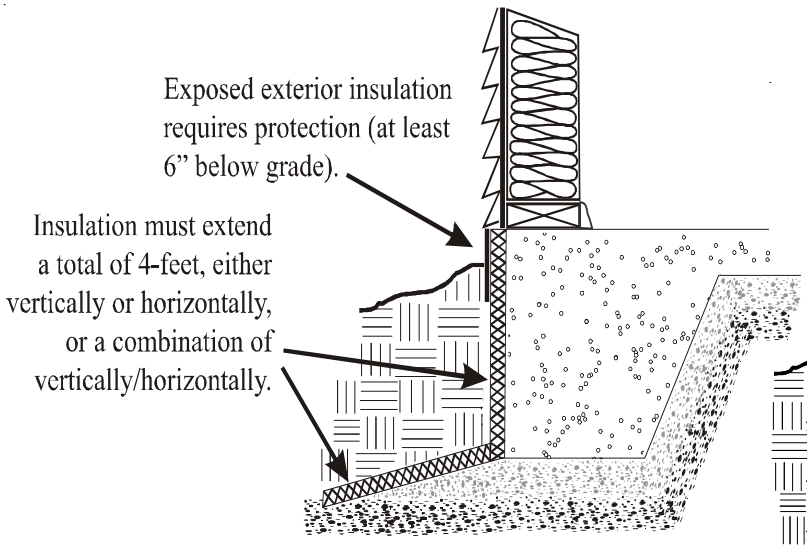

Option 4

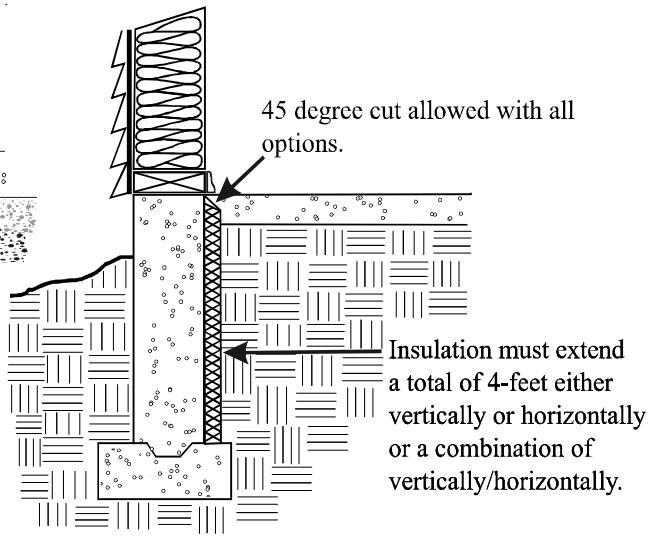

Unconditioned Crawlspace with Floor Insulation and Foundation Vents

An option for insulating a crawlspace is to insulate the floor and install code-required venting. This option treats the crawlspace as an unconditioned space. Insulation levels are listed in Table 1 under the floor requirements or follow REScheck requirements. Venting, air sealing, heating system sealing, duct and pipe insulation requirements are listed on Figure 2.

FIGURE 2

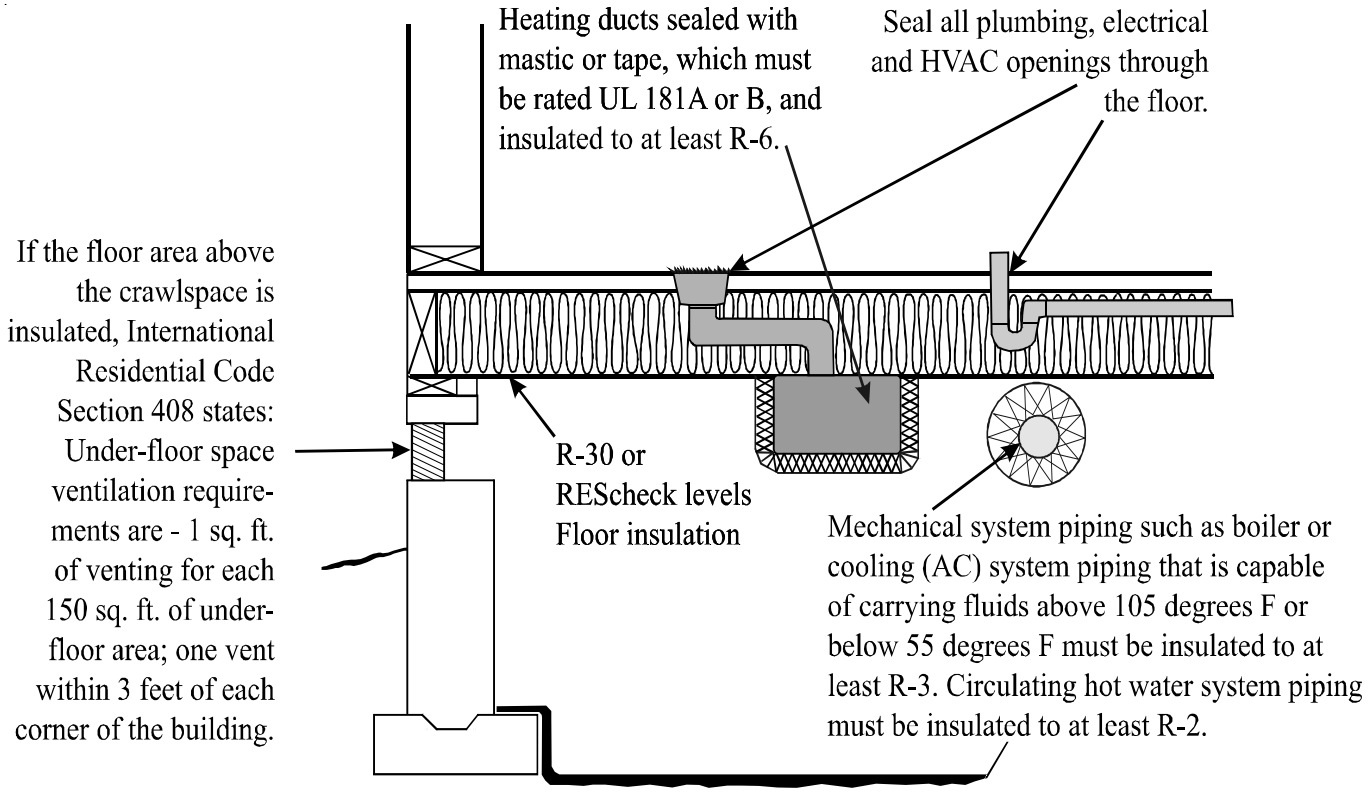

Nonvented Crawlspace with Foundation Wall Insulation

Montana Amended Section 402.2.9

As an alternative to insulating floors over a crawlspace, crawlspace walls may be insulated when the crawlspace is not vented to the outside. Temporary crawlspace vent openings are allowed during construction. These vent openings must be closed, sealed, and insulated to the same R-value of the surrounding crawlspace wall when construction is complete and prior to final inspection. Crawlspace wall insulation must be permanently attached to the wall and cover the entire height of the crawlspace wall. Exposed earth in the unvented crawlspace must be covered with a continuous class 1 vapor retarder, usually 6 mil black poly. All joints of the ground cover must be overlapped at least 6 inches and be sealed or taped. The edges of the ground cover must extend at least 6 inches up the foundation wall and be attached to and sealed to the foundation wall.

When an enclosed crawlspace gets wet from rain or snow, it is important to dry the space with adequate air flow as soon as possible. In order to dry the space and prevent moisture damage, it is recommended to temporarily install fan(s) to provide air flow through the crawlspace access and other openings.

Insulated Crawlspace Foundation Wall Options are to Exhaust Air from the Crawlspace or to Supply Conditioned Air into the Crawlspace

Crawlspace Exhaust Air Option

This code option requires continuously exhausted air from the crawlspace at a rate of 1 cubic foot per minute (cfm) for each 50 square feet of crawlspace or 20 cfm per 1000 square feet of crawlspace. The ground in the crawlspace must be covered with an approved vapor retarder, usually 6 mil poly. Section 408.3 of the 2006 IRC calls for an air pathway to the common area (such as a duct or transfer grille). This option provides a continuous flow of fresh air into the house while exhausting stale air, enhancing indoor air quality.

Crawlspace Exhaust Air Option

FIGURE 3

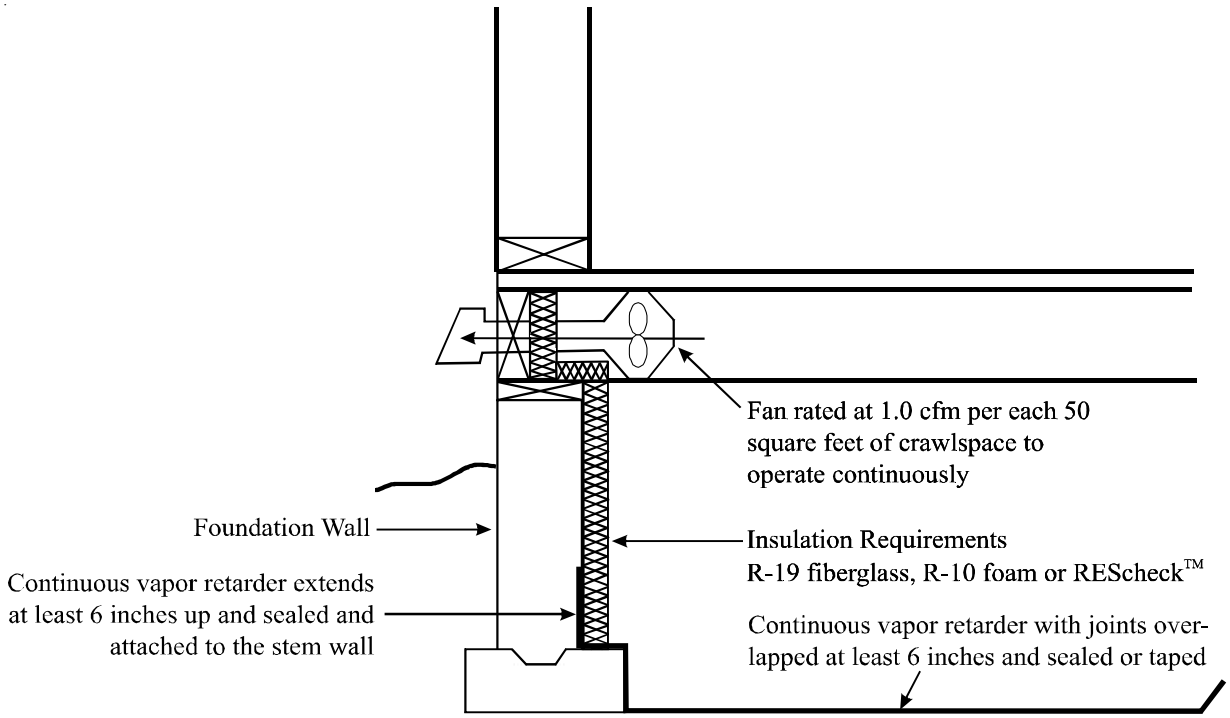

Section 408.3 of the 2006 IRC requires the exposed earth to be covered with a continuous vapor retarder. Joints of the vapor retarder must be overlapped by 6 inches and must be sealed or taped. The edges of the vapor retarder must extend at least 6 inches up the stem wall and be attached and sealed to the stem wall. Duct mastic is a good sealing material for many poly vapor retarders.

Natural venting combustion appliances such as conventional gas water heaters are not recommended to be installed in mechanically ventilated crawlspaces because of backdrafting concerns. Sealed combustion appliances are acceptable when installed and documented for safe operation by qualified personnel.

Supply Conditioned Air into Crawlspace Options

The intent of this code option is to treat crawlspaces with foundation wall insulation as semi-conditioned spaces. Consider that most basements are conditioned, or semi-conditioned, spaces and basements do not require venting. The purpose of venting was to help dry the crawlspaces if moisture was present. However, in many cases the major source of crawlspace moisture is ground moisture evaporation. A continuous vapor retarder should reduce the moisture that can enter the crawlspace. It should be a minimum of 6-mil poly but for longevity or in high travel areas a thicker more durable material is recommended. A sealed vapor retarder is part of a radon control system which should assist with the removal of evaporating ground moisture. See Figure 5 - **(Radon Systems are not Required by Code).**

Conditioning a crawlspace means to treat it as if it were part of the living area of the house. Code required conditioning can be accomplished by supplying a small amount of airflow into the crawlspace; 1 cfm (cubic foot per minute) of airflow for each 50 square feet of crawlspace or 20 cfm per 1000 square feet of crawlspace. An option for controlling supply air is to install an adjustable 4-inch round diffuser grille in the supply duct. Large crawlspaces may require additional grilles. Listed below are three options used for conditioning crawlspaces.

1) Heat recovery ventilator providing supply and return air
2) Heating/air conditioning system providing supply air
3) Supplemental fan providing supply air

During the season when the heating/air conditioning system would not be operating, a recommendation is to have the air handler or supplemental fan cycled on for 5 minutes each hour.

If the crawlspace is conditioned with heating/air conditioning supply air, supplemental fan or mechanical exhausting air, Section 408.3 of the 2006 IRC calls for an air pathway to the common area (such as a duct or transfer grille).

Air Sealing Requirements

Section 402.4.1

Uncontrolled air leakage can significantly increase heating bills and cause uncomfortable drafts. Therefore, the energy code requires an **air barrier** for control of air leakage. An air barrier is a material that blocks air flow **through or into** the building envelope.

Some of the major air leakage areas that must be sealed with an air barrier material, durable caulk, or foam sealant are:

1. Openings between the building structure and exterior windows and door frames;
2. Openings around electrical wire, boxes, recessed light fixtures, and plumbing piping through the attic, exterior walls and other unheated spaces;
3. Dropped ceilings or chases adjacent to the thermal boundary;
4. Behind tub and showers on exterior walls;
5. Common walls between dwelling units;
6. Attic access openings;
7. Rim/band joist junctions;
8. Other sources of infiltration.

These locations are shown on Figure 4. (Note: *fiberglass and cellulose do not stop airflow, and do not qualify as air barriers. Generally, the facing materials used on fiberglass batt insulation cannot be adequately sealed to be considered an air barrier.*)

Sealing air leaks significantly reduces energy loss. A well sealed home should have a mechanical ventilation system, although not required by code, to ensure good indoor air quality. Mechanical ventilation options range from a quiet 80 to 100 cubic feet per minute (cfm) bathroom fan rated at 1.5 sone sound rating or less, to heat recovery ventilation systems. Heat recovery systems bring fresh air into the house and reclaim or recover about 80 percent of the heat from the stale air that is being drawn out of the house, and may be eligible for the Montana energy tax credit.

Air Sealing and Insulation Options
Section 402.4.2
Certain sealing and insulation installation requirements of the code can be demonstrated in one of two ways: either, 1) blower door test option; or 2) visual inspection option.

1) **Blower Door Test Option**
   Section 402.4.2.1 (Montana Amended)
   This option allows compliance when a blower door test measurement of building air tightness results show four air changes per hour or less when tested at 50 Pascal – 4 ACH50. A blower door test is performed using a large fan assembly placed in an exterior door opening. The fan draws air out of the building while measuring the air flow required to hold a slight vacuum in the building.

2) **Visual Inspection Option**
   Section 402.4.2.2
   This option requires that the measures listed in the 2009 IECC Table 402.4.2 are field verified. Where required by the code official, an approved party independent of the installer shall inspect the air barrier and insulation.

Partial list of Table 402.4.2 – Air barrier and insulation inspection component criteria (see Figure 4).

Insulation Inspection Criteria
Batt insulation is cut to fit around wiring and plumbing, narrow cavities or spray/blown insulation extend behind piping and wiring and narrow cavities.

Wall corners and headers must be insulated.

Air Barrier Criteria
Air permeable insulation such as fiberglass and cellulose must be inside of an air barrier. Insulation placed in the conditioned boundary of the building; walls, ceilings, dropped ceilings/soffit, rim joists, fireplace walls, shower/tub must be in substantial contact and continuous alignment with the buildings' envelope air barrier.

Air barrier extends behind electrical and phone boxes on exterior walls, or air sealed type boxes are installed. (See Figure 4.)

FIGURE 4. **Air Sealing and Prescriptive Path Insulation Requirements**

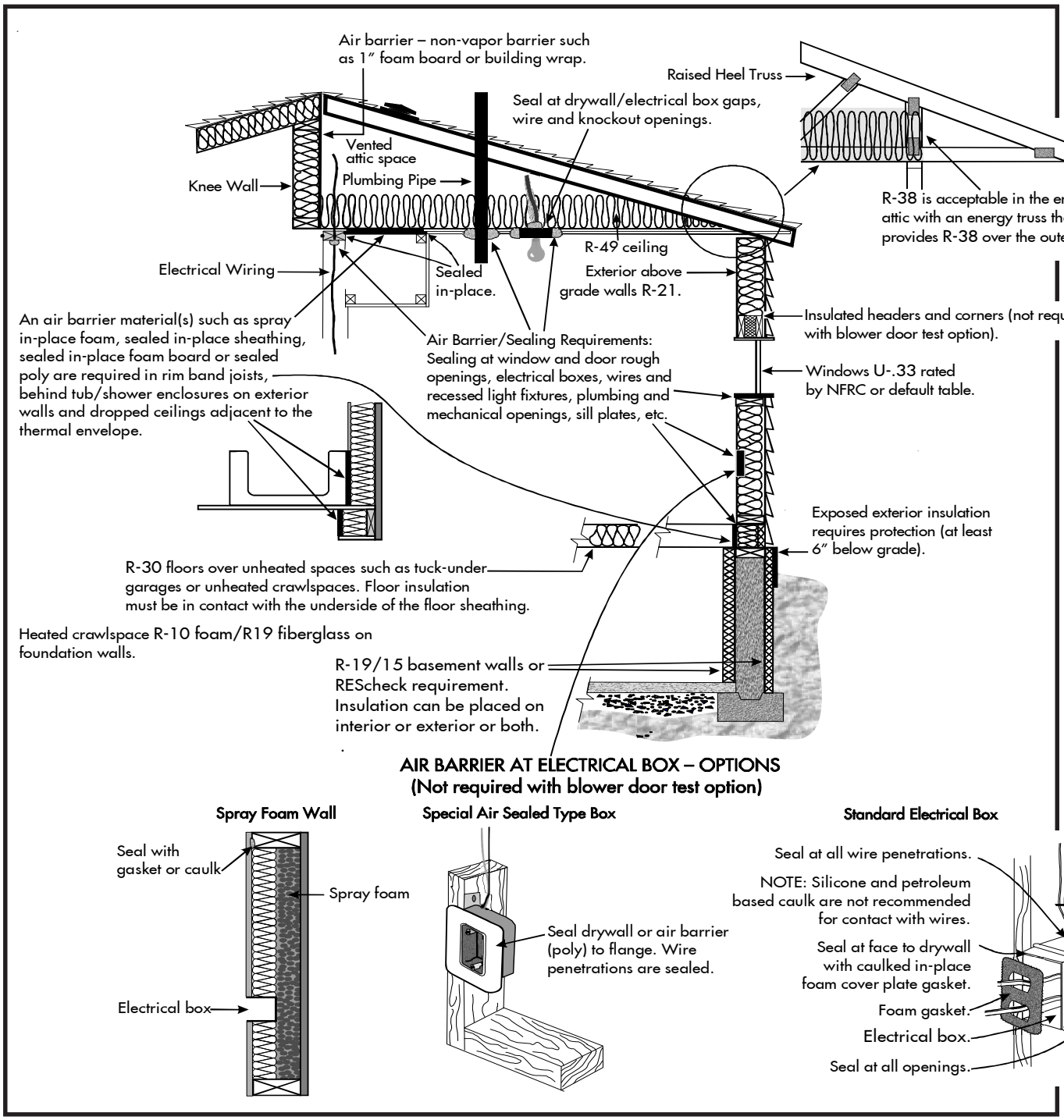

Recessed Light Requirements

Section 402.4.5

Recessed lights that are installed in the building thermal envelope (typically a ceiling with unheated space above) must be sealed to limit air leakage between conditioned and unconditioned spaces. All recessed lights must be IC rated and labeled as meeting ASTM E 283. All recessed lights shall be sealed with a gasket or caulk between the housing and interior ceiling or wall covering.

Heating Systems Section 403

Programmable Thermostats – Section 403.1.1
Programmable thermostats are required on forced air heating systems (furnaces) and have to be capable to set back or temporarily operate the system to maintain temperatures down to 55 degrees or up to 85 degrees. It should be initially programmed with a heating temperature no higher than 70 degrees and a cooling temperature no lower than 78 degrees.

Ducts – Section 403.2
All ducts, both supply and return, air handlers, filter boxes, and building cavities used as ducts, shall be sealed. Building cavities cannot be used for supply ducts. Supply ducts in nonconditioned attics must be insulated to at least R-8. All other ducts, both supply and return, located outside the conditioned boundary must be insulated to at least R-6.

Heating system ductwork and air handler (cabinet) that are located outside of the conditioned boundary, such as in the attic or garage, must be tested for tightness.

Testing is not required if all ductwork and the air handler (cabinet) are located within conditioned space. Duct tightness must be verified with either a test at rough-in or at completion.

1. If tested before completion (rough-in), the total leakage must be equal to or less than 6 cubic feet per minute (cfm) per 100 sq. ft. of the conditioned floor area when tested at a pressure differential of 0.1 inches w.g. (25 Pascal), across the roughed-in system, including the manufacturer's air handler enclosure. If the air handler is not installed at the time of the test, total leakage must be equal to or less than 4 cfm per 100 sq.ft. of conditioned floor area. All register boots should be sealed for the test.

2. If tested after completion (post construction), the leakage to the outdoors must be equal to or less than 8 cfm per 100 sq.ft. of conditioned floor area, **or** a total leakage equal to or less than 12 cfm per 100 sq.ft. of conditioned floor area when tested at a pressure differential of 0.1 inches w.g. (25 Pascal) across the entire system, including the manufacturer's air handler enclosure. All register boots shall be sealed during the test.

Pipe Insulation – Section 403.3
Mechanical system piping such as boiler or cooling (AC) system piping that is capable of carrying fluids above 105 degrees F or below 55 degrees F must be insulated to at least R-3.

Circulating hot water system piping must be insulated to at least R-2. These systems must also include an automatic or readily accessible manual switch that can turn off the hot water circulating pump when the system is not operating.

Proper Sizing of Heating and Cooling Equipment – Section 403.6
Heating and cooling equipment shall be sized based on the building loads calculated in accordance with ACCA Manual J or other approved heating and cooling calculation method. In the past many heating and cooling systems were oversized, resulting in increased installation and operating costs.

Lighting Requirement – Section 404
At least half of the permanently installed lighting fixtures must have high-efficacy lamps or light bulbs, (need not be fixtures) which include compact fluorescent (CFL), T-8 or smaller linear fluorescent or LED or lamps with a minimum efficacy of 60 lumens per watt if over 40 watts, 50 lumens per watt if over 15 watts to 40 watts, and 40 lumens per watt if 15 watts or less.

Because of the potential for high indoor levels of radon, the Montana Department of Environmental Quality recommends new houses have basic radon abatement components installed during construction. Contact the Montana Radon hotline for more information at 1-800- 546-0483.

Passive Radon Control System in Crawlspace With Potential to Remove Some Ground Moisture

Additional Information (Radon Systems are not Required by Code)

FIGURE 5

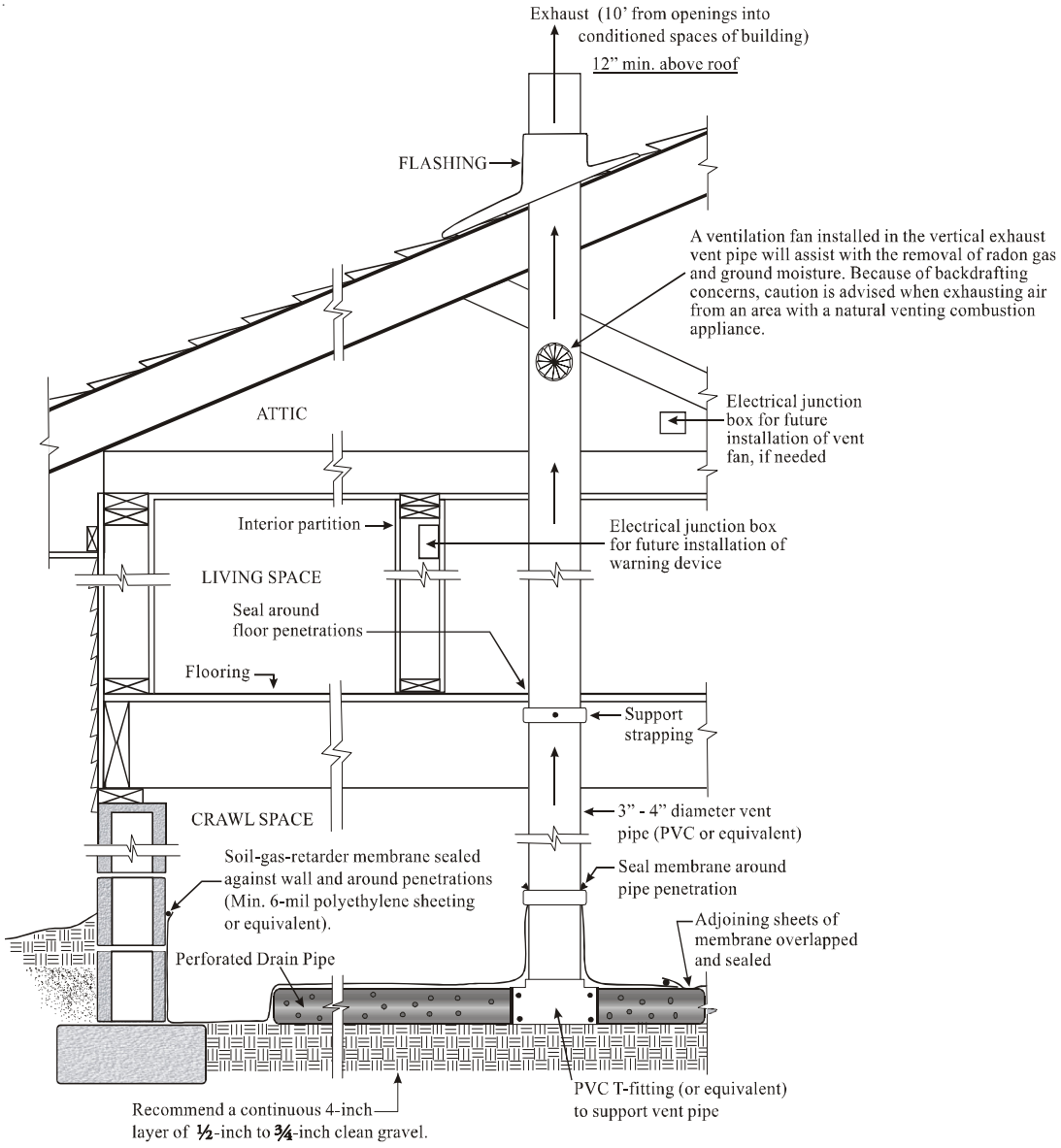

Energy Efficiency Components Label

Labels are available at no cost from many sources. Several utility companies are distributing labels as a public service. Local Montana Homebuilder Association offices in Billings, Bozeman, Great Falls, Helena, Kalispell, and Missoula distribute labels to their members.

Labels are also available from:

Montana Department of Environmental Quality • Energy and Pollution Prevention Bureau
1100 N Last Chance Gulch, P. O. Box 200901 • Helena, Montana 59620-0901

or by calling the Montana Department of Environmental Quality at (406) 841-5200.
Also, camera ready copies are available from our DEQ website:
http://deq.mt.gov/Energy/conservation/default.mcpx

FIGURE 6. Energy Efficiency Components Label with Prescriptive Path Listing

ENERGY EFFICIENCY COMPONENTS

Address:_____

Ceiling	Flat	R- 49
	Vaulted	R- 38
Walls:	Above grade walls	R- 21
	Basement walls	R- 19\15
	Crawlspace walls	R- 19\10
Floors:	Over unheated spaces	R- 30
	Perimeter slab for _____ feet	R- 10
	Under slab for____feet___full	R- _____
Exterior doors:		R- 3
Windows:	NFRC unit rating	U- .33
Water heater:	Energy factor (EF) rating _____	.58
Heating system:	Energy efficiency rating _____	78%
	(AFUE for gas; HSPF heat pump)	
Cooling system:	EER_____ SEER_____	
Heating ducts:	Systems sealed Yes ___X____ No_____	
	In non-conditioned areas insulated to	
	Supply R- 8_____ Return R- 6_____	
	Leakage test at rough-in____ or finished_____	
	Leakage to outside_____ or total leakage_____	
	results @ _____CFM 25 per 100 sq. ft.	
	or N/A _____	
Air Sealing:	Blower door test results @ ____ ACH 50 or	
	visual inspection____	

Other (i.e., ventilation systems, radon abatement_____

_____

Insulation Subcontractor:_____

Certified by:_____ Date:_____

Builder (Company):_____

The home builder certifies compliance with ARM 24.301.162 by completing and signing this label.

THIS LABEL MUST BE PERMANENTLY AFFIXED BY HOME BUILDERS TO THE INTERIOR BREAKER PANEL ON ALL NEW RESIDENTIAL BUILDINGS, AS REQUIRED BY SECTION 50-60-803, MONTANA CODE ANNOTATED AND 2009 IECC – SECTION 401.3

Montana Energy Conservation Tax Credit

Homebuyers are eligible for a state tax credit of up to $500 / $1000 per couple when they purchase or build an "above energy code" home or improve the efficiency of their existing home. **New for 2009, certified ENERGY STAR or Montana Green Building Program (above Bronze level) homes with an ENERGY STAR heating system receive a $500 Montana tax credit. Only one of these credits can be used.** For new houses, the credit is 25 percent of the "extra" cost of the building components, such as insulation levels, that are more energy efficient than the Montana energy code requirements. On July 1, 2010 a new rule was adopted affecting the tax credit for installation of windows, doors and HVAC equipment. Go to www.energizemontana.com for additional information.

Refrigerators, clothes washers, and dryers do not qualify for the credit. Taxpayers should use tax form ENRG-C to claim the energy conservation tax credit.

Alternative Energy Systems Tax Credits

Homebuyers are eligible for the following Alternative Energy Systems Tax Credit:

geothermal $1,500; wind and solar $500/$1000 per couple; and eligible wood and pellet stoves $500/$1000 per couple.

Taxpayers should use tax form ENRG-B to claim the alternative energy tax credit and form ENRG-A for the geothermal tax credit.

Tax credit forms are available online at **www.discoveringmontana.com/revenue/**.

Definitions of Some Energy Efficient Terms

A good comparison shopper needs to understand certain units of measurement, such as MPG (miles per gallon) when shopping for a new car. Shopping for energy efficiency also involves knowing a few units of measurement. Each Energy Efficiency Components Label may contain five or more different units of measurement. The following definitions will help you crack the code of energy efficiency.

R-VALUES – The units used to measure the insulating value of an object. The higher the R-value, the more insulating value an object has. A high density batt of fiberglass insulation for a 2" x 6" wall has an R-value of 21.

U-VALUES – Another unit of insulation measurement, U-values, measure heat loss through windows. The U-value of a window is the reciprocal of its R-Value (U = 1/R). For instance, a window with a U-value of 0.33 is equivalent to an R-value of 3 (0.33 = 1/3). Because the U-value is the inverse of the R-value, a lower U-value indicates a window that has better insulating capabilities than a window with a higher U-value.

NFRC UNIT RATING – The National Fenestration Rating Council (NFRC) determines the U-value for most windows. This rating is placed on a label attached to all new NFRC rated windows. If the NFRC rating is available, the home builder should use this number when filling in the U-value on the Energy Efficiency Components Label for a new home. Windows with a U-value of 0.4 or less usually have a low-e coating.

EF – Used to determine the energy efficiency of hot water tanks, EF is the abbreviation for "Energy Factor." This unit is a ratio of the heat energy contained in the water in a hot water tank over a certain period of time divided by the energy that the hot water heater consumes over the same time period. The most efficient electric water heaters have an EF rating of 0.93 to 0.96, while the most efficient gas-fired water heaters have energy factors ranging from 0.8 to 0.9.

Definitions of Some Energy Efficient Terms - ***continued from page 13***

AFUE – An abbreviation for "Annual Fuel Utilization Efficiency." AFUE is a measure of the effectiveness of gas and oil space heating systems. All furnaces and boilers in the United States are required to have an AFUE rating of at least 78 percent. The most efficient gas furnaces have an AFUE of 92 percent to over 96 percent, while the most efficient gas hot-water boilers have AFUE ratings of around 84 percent to 90 percent. Energy-efficient oil furnaces have similar AFUE ratings, in the mid-80s to 90 percent. The most efficient oil-fired hot water boilers have efficiencies that are slightly lower, with AFUE ratings up to around 85 percent. Gas or oil-fired steam boilers have somewhat lower ratings, with the most energy-efficient units having an AFUE around 80 percent.

HSPF – Heating Season Performance Factor is the measurement unit for determining the efficiency of heat pumps. It is calculated by dividing the estimated seasonal heating output (in Btu) by the seasonal power consumption (in watts). The most efficient electric heat pumps on the market have an HSPF of between 7.7 and 10.

SEER – **Seasonal Energy Efficiency Ratio**. The total cooling output of an air conditioner during its normal annual usage period for cooling, in Btu/hours, divided by the total electric energy input during the same period in watt-hours.

Following are some websites with additional energy conservation information:

■ Advanced Energy	Raleigh, NC	**www.crawlspaces.org**
■ Building Science Corporation	Westford, MA	**www.buildingscience.com**
■ Efficient Windows Collaborative	Washington, DC	**www.efficientwindows.org**
■ Energy and Environmental Building Association	Bloomington, MN	**www.eeba.org**
■ EPA Home Performance with Energy Star	Washington, DC	**www.energystar.gov**
■ Lawrence Berkeley Laboratory/, Energy Performance of Buildings Groups	Berkeley, CA	**www.lbl.gov**
■ National Center for Appropriate Technology	Butte, MT	**www.ncat.org**
■ Partnership for Advancing Housing Technology (PATH)	Washington, DC	**www.pathnet.org**
■ U.S. Department of Energy	Washington, DC	**www.eere.energy.gov**
■ Northwest Energy Star Homes		**www.northwestenergystar.com**
■ National Fenestration Rating Council		**www.nfrc.org**
■ Montana Green Power		**www.montanagreenpower.com**

Look for the ENERGY STAR certification on windows, heating, air conditioning systems, and appliances.

200 copies of this public document were published at an estimated cost of $.28 per copy, for a total of $56.00, which includes $56.00 for printing and $0.00 for distribution.

printed on recycled paper